Dr. Thiedig

Sampling & Analysing Systems

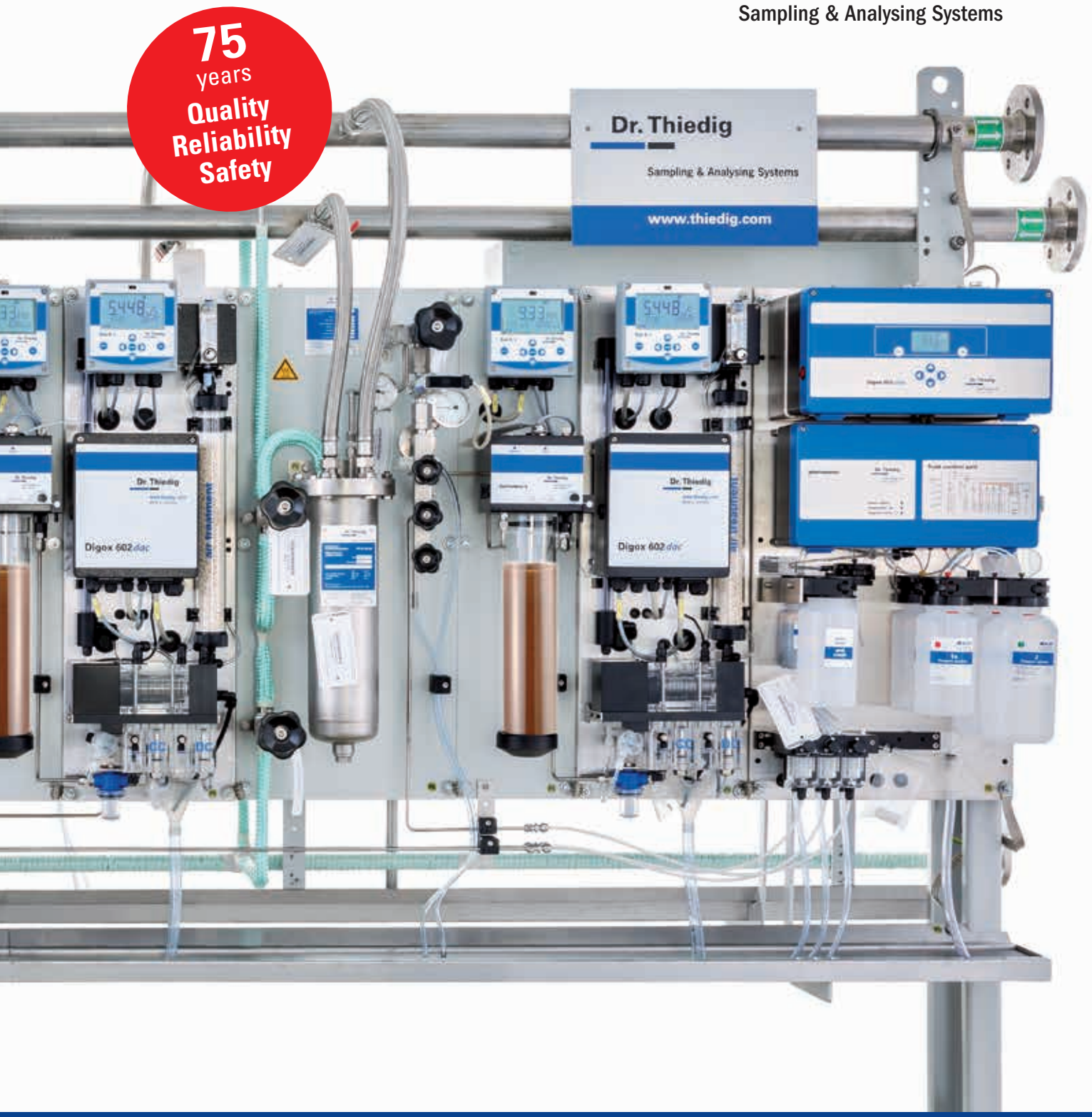

Steam and Water Analysing Systems – SWAS

competence and know-how

The Thiedig sampling system is the result of many decades of experience. Our customers are global EPC contractors and operators of power plants. Constant development, individual engineering and the highest quality standards form the basis which distinguishes Dr. Thiedig as a reliable partner and experienced specialist.

All high-pressure components as the heart of the sampling and analysing systems are produced by Dr. Thiedig at the Berlin-located facility and guarantee the highest levels of quality, reliability and plant safety. The sampling system is complemented by our comprehensive product range of analysers. With the experience of 75 years in the field of plant and equipment construction, we are constantly striving to adapt our products to the changing challenges of the market and to provide a maximum of equipment availability.

Content

Thiedig Sampling System (SWAS)	4
– Typical extraction points and measuring tasks	*5*
System technology	6
Sampling systems	9
Sampling coolers	11
High-pressure valves	14
System accessories Sample	17
System accessories Cooling water	23
Sampling and analysing systems	24
Sampling containers	26
Condenser monitoring system	27
Sequencers & data transmission	28
Analysing devices	29
Quality assurance	36
Technical information	37

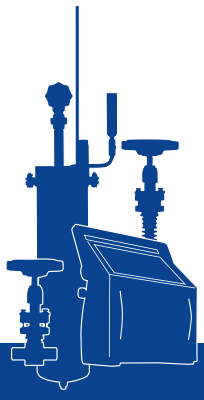

Thiedig Sampling System (SWAS)

Application

Quality assurance in the water-steam cycle of steam generation plants is of great importance for a high availability and for the best possible corrosion protection. For this purpose, it is necessary to analytically monitor the cycle at different points.
Pressure and temperature are reduced to environmental conditions and the required physicochemical measurements are carried out.

SWAS container with separated conditioning analysing part

Chemical monitoring of the water-steam cycle ensures

- high plant availability
- efficient operation of the entire power plant
- avoidance/reduction of corrosion and deposits
- reduced operating costs and repair costs
- compliance with environmental regulations and conserving resources

Important demands on the SWAS design

- *Extraction of representative samples and sample transport from the extraction point to the sampling unit*
- *Sample preparation by reducing pressure and temperature as well as ensuring constant sample flows*
- *Monitoring of physicochemical measurement parameters with appropriate instruments/analysers*
- *Signal transfer for validation and control to the central control system*

Typical extraction points and measuring task

The extraction points for the sampling and their instrumentation for the registration of the necessary physicochemical parameters vary depending on the plant type, chemical operation mode and any possible analysis-specific characteristics and needs. The scope is specified in the international regulations and guidelines.

Example: Extraction points of a 3-pressure combined cycle power plant (CCPP)

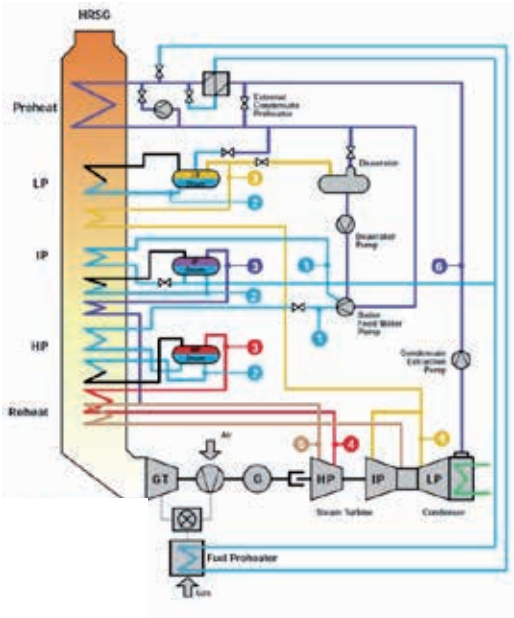

1 - Feed water
2 - Boiler water
3 - Saturated steam
4 - Live steam
5 - Reheating
6 - Condensate

Cooling Water
Condensate
Feed Water
LP Steam
IP Steam
HP Steam
Reheat Steam

Example: Conventional analysis measurement of a classic drum boiler

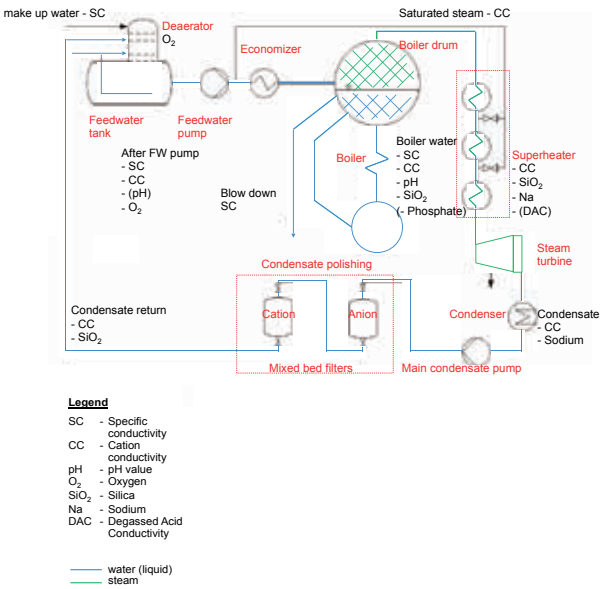

Requirements of the water-steam cycle (*)

(*) The specified values represent guideline values.
These values can vary depending on the boiler type and operation mode.

Drum boiler - AVT operation mode

	Acid Conductivity /DAC	pH-value	O_2	Na	SiO_2
Feed water	< 0,2 µS/cm	approx. 9.5 pH	< 100 ppb	< 5 ppb	< 20 ppb
Boiler water	< 3 µS/cm	approx. 9.5 pH	n.a.	n.a.	< 100 ppb
Live steam	< 0,2 µS/cm	n.a.	n.a.	< 5 ppb	< 20 ppb

Once-through boiler (Benson Type) - AVT operation mode

	Acid Conductivity	pH-value	O_2	Na	SiO_2
Feed water	< 0,2 µS/cm	approx. 9.5 pH	< 20 ppb	< 5 ppb	< 20 ppb
Live steam	< 0,2 µS/cm	n.a.	n.a.	< 5 ppb	< 20 ppb

System technology

System design

The Thiedig sampling system offers various sampling units for different measurement tasks (type A - E), please refer to page 10. The sampling systems are additionally completed with the corresponding sample cooler (type 1 - 3) depending on the required cooling. Moreover, a comprehensive portfolio of accessories is available.

PE 1_ without sampling cooler for temperatures up to 50 °C

PE 2_ with sampling cooler PE 02 for steam temperatures up to 600 °C

PE 3_ with sampling cooler PE 03 for water up to max. 250 °C

PE 20 special cooler for large sample amounts (e.g. blow-off coolers) or gas applications

Special designs

For special requirements, sampling systems can be made to specification, e.g. taking into account specific materials or components.

Secondary cooling

If required, the use of an additional secondary cooling is possible. Secondary cooling is generally operated with chilled water that is generated by means of an electrical cooler (chiller). Secondary cooling is always necessary in case of cooling water temperatures > 38 °C in order to keep the sample outlet temperatures within the range of the normal temperature compensation (up to 45 °C). Secondary cooling systems are available in the form of water baths with suspended cooling coils (iso-thermal bath) or special axial segment coolers.

Design/Certification

We can provide material certificates and certificates of conformity regarding the sampling units and high-pressure components according to DIN EN 10204. The design of the pressure-retaining parts is also carried out in accordance with valid standards and regulations, e.g. TRD, AD 2000 or DIN EN 13445 or, alternatively, according to ASME.

Specifications for offers

We will be glad to submit you solution-orientated offers, which are specifically customised to clients‘ needs.

To make a quotation, we require from you information on:

1. *Operating mode of the medium*
2. *Maximum sample inlet temperature/ maximum sample inlet pressure*
3. *Desired analysis measurements/ instrumentation*
4. *Quality of cooling water (inlet temperature, chloride content)*
5. *Desired system accessories*

We look forward to assisting you in the selection of the instrumentation needed. For this purpose, please be so kind as to specify the boiler type and the chemical operation mode.

Analysers/Instrumentation

The sampling units and systems also include installation and wiring of the analysers.

Dr. Thiedig offers a comprehensive portfolio of its own analysers for the physiochemical parameters required for the water-steam cycle. Alternatively, the use of third party products or the provision of the needed equipment is possible.

Additional system accessories

Depending on the respective requirements, a large selection of system accessories can be taken into account. This portfolio includes for example the supply of autonomous cooling stations (air/ water) or specific heat exchangers for avoiding corrosion in the case of untreated or strongly chloride-contaminated cooling water.

For the analysing section, automatic sequencers are available which can be used for switching several analysing flows to one measuring instrument.

To increase the level of automation, the sampling systems can be equipped with electrically powered motor valves to automatically blow out or connect and disconnect the sample flows.

System technology

Recommended design of a sampling panel with different system components

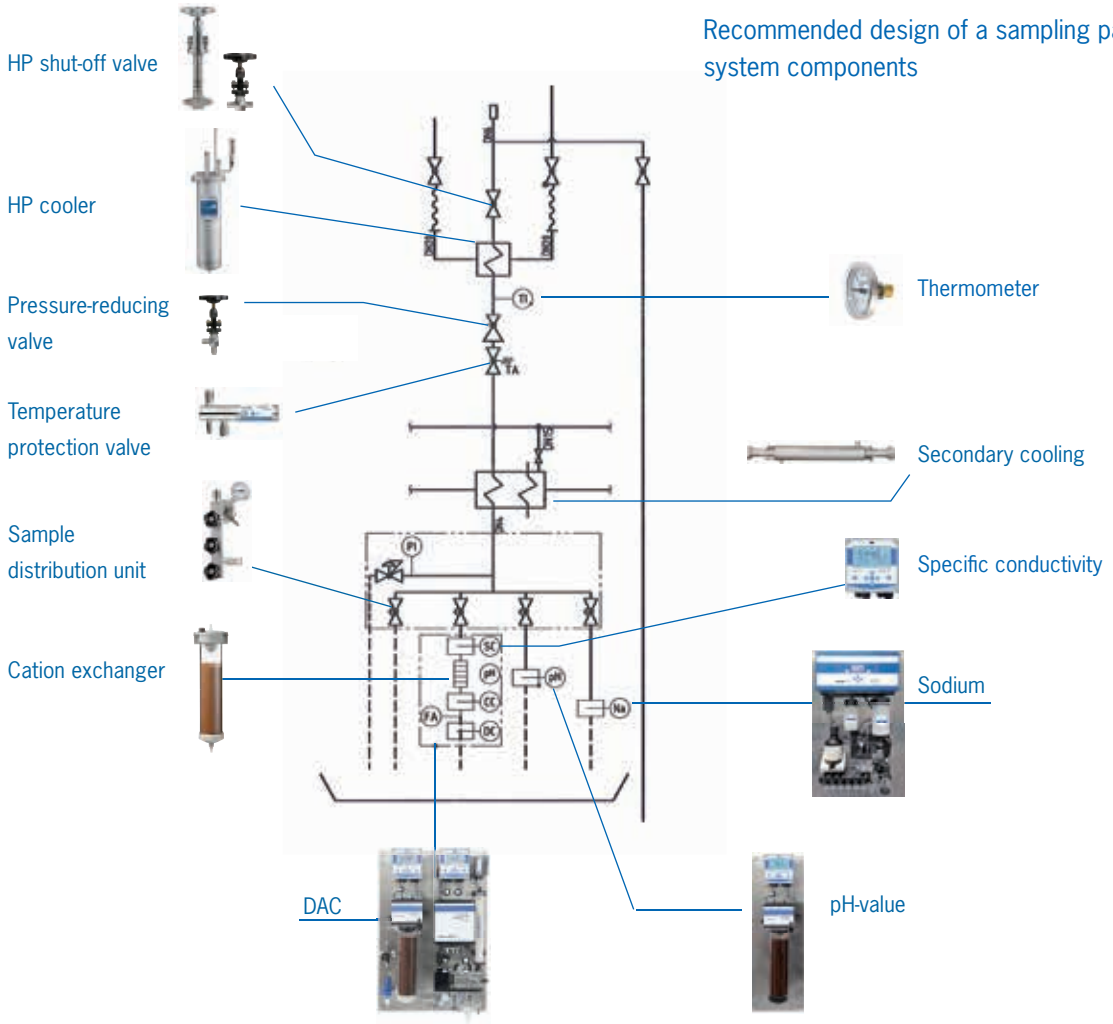

Engineering

SWAS by Dr. Thiedig are based on extensive know-how in engineering & service. As a system manufacturer with a wide-ranging portfolio of internally developed components and analysers, Dr. Thiedig supplies power station manufacturers (EPC) and operators. Well-engineered technology provides the optimum system solution for any type of application. Our experienced staff constantly endeavours to develop – in close collaboration with the customers and organisations – excellent and comprehensive system solutions. Therefore, Dr. Thiedig offers important advantages over conventional system integrators.

System technology

SWAS by Dr. Thiedig provide the suitable problem solution for any type of application that is economical and highly convenient at the same time.
For the most common applications, Dr. Thiedig offers a comprehensive modular system of sampling units and accessories. Particularly the range of accessories makes it possible to respond to specific types of application and problem cases reliably and cost-efficiently. SWAS by Dr. Thiedig comply with most of the international guidelines and recommendations, such as the VGB standards, the ASTM Designation and the EPRI guidelines.

Service

- Tender consulting with definition of tender documents
- Consulting for EPC and operators around SWAS
- Supervision for erection and commission
- Training and Troubleshooting
- After sales services
- Preventive inspections
- Spare parts and Consumables

Sampling systems

The set-up of a sampling system depends on the measuring point (selection of cooler type) and the intended instrumentation. The principle design of the sample preparation is shown in the following block diagram.

The basic functions and additional functions are clearly structured in Dr. Thiedig´s modular system. For the sample cooling, three cooler types (PE1 - PE3) – depending on the medium to be measured – are available. The sampling unit is completed through the choice of the sample distribution block – depending on the analysing flows needed – and the measuring task(s) at hand.

Function blocks of the sample preparation

*) Extract from VGB-S-006

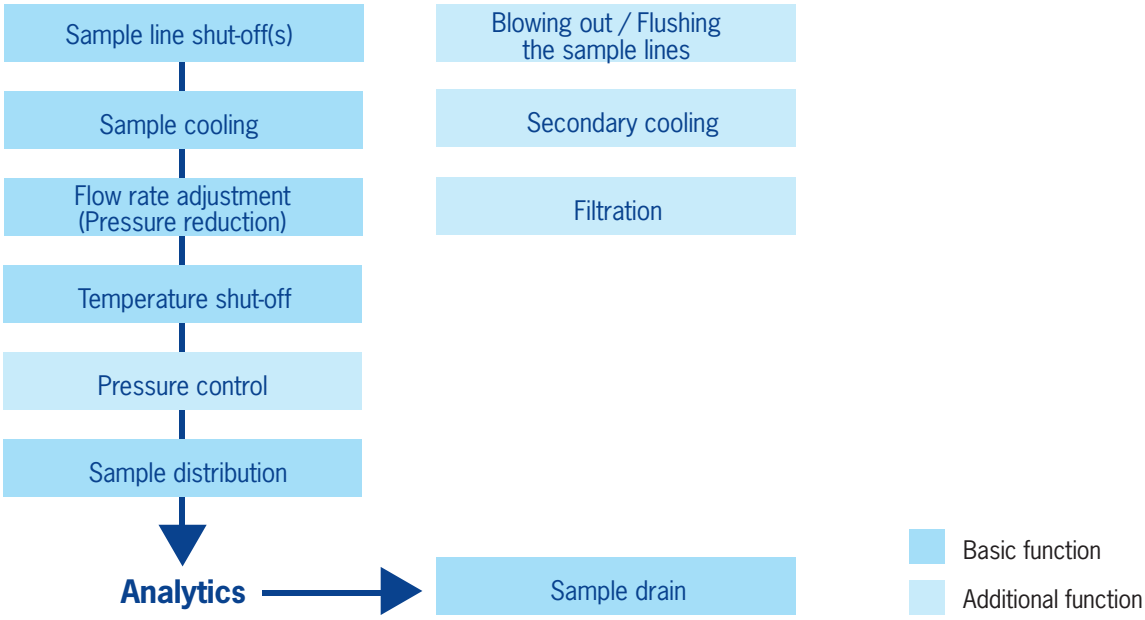

Sample preparation consisting of:

- *Sample cooler PE 02 for a steam measuring point*
- *Sample distribution unit with integrated back pressure regulator*
- *Instrumentation consisting of pH-value measurement*
- *Conductivity measurement with cation exchanger*
- *Laboratory sampling*

Configuration example for a sampling unit

Selection of sampling systems

Type A

Simple laboratory sampling

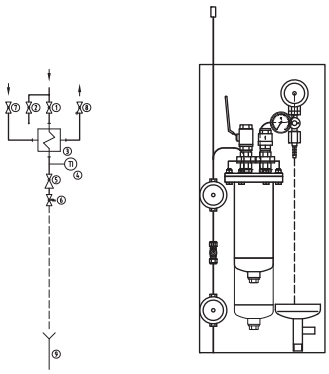

1. Inlet valve VD 50
2. Blow-off valve
3. Sample cooler
4. Temperature indicator
5. Pressure-reducing valve VE 50
6. Temperature protection valve PE 74
7. Ball valve
8. Check valve
9. Drain funnel PE 21

Type B

Conductivity measurement or pH-value measurement and separate laboratory sample

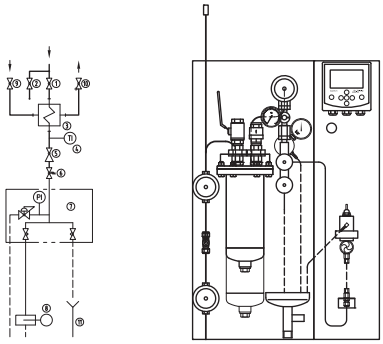

1. Inlet valve VD 50
2. Blow-off valve
3. Sample cooler
4. Temperature indicator
5. Pressure-reducing valve VE 50
6. Temperature protection valve PE 74
7. Valve unit with back pressure regulator
8. Conductivity measurement
9. Ball valve
10. Check valve
11. Drain funnel PE 21

Type C

Conductivity measurement with cation exchanger and separate laboratory sample

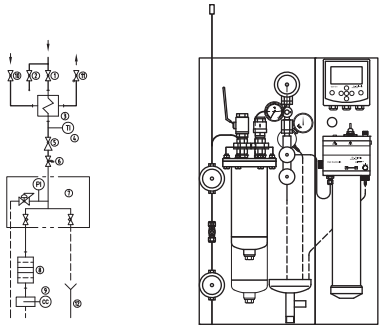

1. Inlet valve VD 50
2. Blow-off valve
3. Sample cooler
4. Temperature indicator
5. Pressure-reducing valve VE 50
6. Temperature protection valve PE 74
7. Valve unit with back pressure regulator
8. Cation exchanger CatControl
9. Conductivity measurement
10. Ball valve
11. Check valve
12. Drain funnel PE 21

Type D

Conductivity measurement with cation exchanger, pH-value measurement and separate laboratory sample

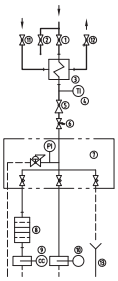

1. Inlet valve VD 50
2. Blow-off valve
3. Sample cooler
4. Temperature indicator
5. Pressure-reducing valve VE 50
6. Temperature protection valve PE 74
7. Valve unit with back pressure regulator
8. Cation exchanger CatControl
9. Conductivity measurement
10. Silica measurement
11. Ball valve
12. Check valve
13. Drain funnel PE 21

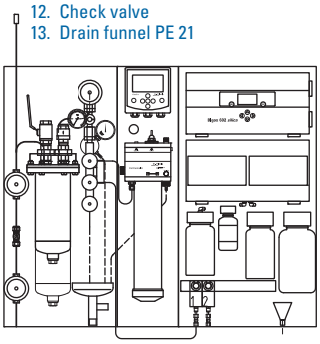

Type E

Conductivity measurement, followed by conductivity measurement with cation exchanger and separate laboratory sample

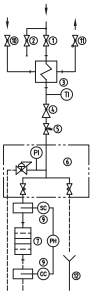

1. Inlet valve VD 50
2. Blow-off valve
3. Sample cooler
4. Temperature indicator
5. Pressure-reducing valve VE 50
6. Temperature protection valve PE 74
7. Valve unit with back pressure regulator
8. DAC measurement
9. Ball valve
10. Check valve
11. Drain funnel PE 21

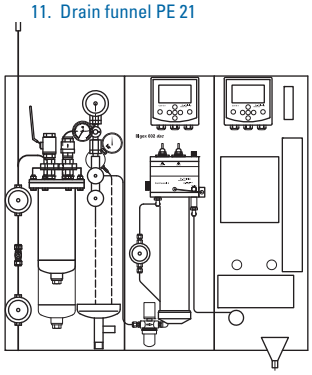

→

Further configurations are possible by selecting additional sample distribution units (up to 6 sample flows) and taking into account further analysis measurements (e.g. oxygen, sodium and silica). As standard, the sampling units are attached to the assembly panel made of aluminium with powder coating in RAL 7035.

Sample coolers

The sample coolers are the most important component of the sampling units.

As pressure-retaining heat exchanger, the sample coolers comply with the relevant design criteria (AD 2000, TRD, DIN EN 13445).

Testing of the sample coolers is conducted according to DGRL, category SEP. Alternatively, the design examination according to ASME is possible.

The thermodynamic design varies depending on the medium to be cooled. A general distinction is made here between the individual aggregate states (water or steam). The sample quantity is 60 kg/h according to the international guidelines/recommendations. If higher flows are required (e.g. in case of blow-off coolers), sample quantities of up to 250 kg/h are possible. For the use in supercritical power plants with steam temperatures > 600 °C, sample coolers that are especially developed for these parameters are available.

Features of the Dr. Thiedig sample cooler

- *High thermodynamic efficiency due to the (cross-) counter flow principle*
- *Low temperature difference, sample outlet temperature only 3 K above cooling water inlet*
- *Design of the cooling coil for maximum pressure and maximum temperature*
- *Easily removable cooling shell for low maintenance*
- *Design completely made of stainless steel*
- *Cooling coil available in highly corrosion-resistant materials*
- *Cooling capacity up to 60 kW*

Thermodynamic data

Typical cooling surface	approx. 0.2 - 0.5 m^2
Typical volume of tube side	approx. 0.2 - 0.5 liters
Typical volume of shell side	approx. 1.5 - 5 liters
Typical cooling capacity	approx. 15 - 60 kW
Sample outlet temperature	approx. 3 K above cooling water inlet
Cooling water demand	approx. 20 x sample flow rate in water approx. 40 x sample flow rate in steam
Pressure loss, shell side	approx. 0.3 bar

Types of sample coolers

The sample cooler **PE 02** is essentially designed for steam measuring points and consists of an outer and inner cooling coil. Depending on the media temperature and the cooling water quality, the cooling coil can be supplied in different materials.

PE 02

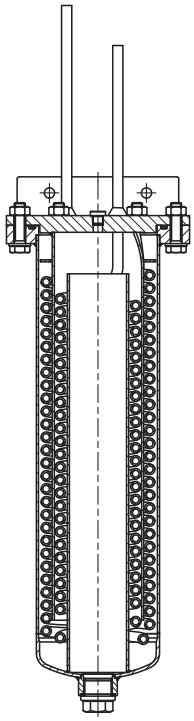

PE 03

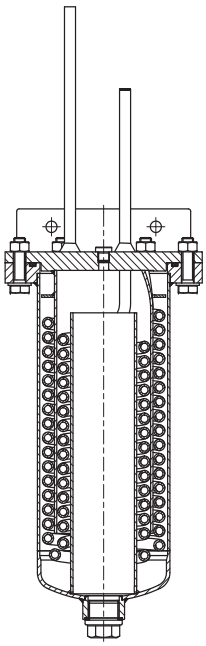

The sample cooler **PE 03** predominantly covers water measuring points (exception: boiler water > 250 °C). The other constructional features basically correspond to the type **PE 02**, however, with shortened cooling coil lengths. The sample cooler **PE 03** is also available in different materials for the cooling coil.

PE 20

The sample cooler **PE 20** is designed for higher cooling capacities. Typical applications for the type **PE 20** is the use as blow-off cooler or the use of analysis measurements with a higher demand for sample material.

Unlike the design of the types **PE 02** and **PE 03**, the sample outlet is at the bottom, thus avoiding an accumulation of condensate (e.g. for the use in the cooling of hydrocarbons). A further special feature of the design is the possible replacement of the cooling coil without welding.

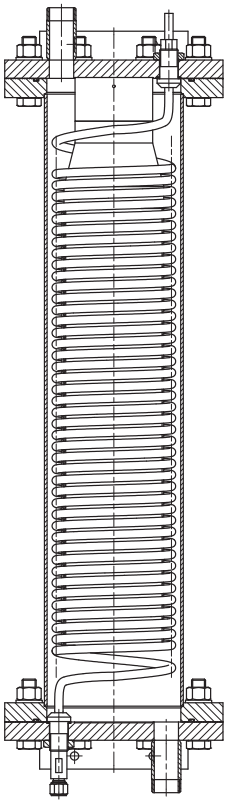

The axial segment cooler **PE 04** is used for the cooling of measuring points < 120 °C or as secondary cooler. Each segment cooler has its own autonomous cooling coils, so that 2 measuring points per segment may be cooled. The special design of the axial segment coolers makes it possible that multiple segments can be connected to one another, without increasing the feeding cooling water flow temperature in the segments as a result of the serial connection.

PE 04

The **Isothermal Bath** is exclusively designed for the use as secondary cooling system. In the bath, the required number of secondary cooling coils can be mounted. In addition, the later sealing – by means of a dummy flange plate – of any measuring points that are not required is possible. The specially designed nozzle bottom ensures the uniform distribution of cold water in the entire bath.

Isothermal Bath

Overview table of cooler types

Type	PE 02	PE 03	PE 20	PE 04 (3)	Iso-bath (3)
Max. sample pressure (bar)	268	268	268/580	64	16
Max. sample temperature (°C)	450/580	250	600	120	100
Test pressure (1) at RT (bar)	600	600	600	100	-
Tube diameter of cooling coil (mm)	3/8″ or 10 mm	3/8″ or 10 mm	3/8″	1/4″ or 6 mm	1/4″ or 10 mm
Length of cooling coil (m)	15	9	24	3	12
Material of cooling coil (2)	1.4404/1.4563 (316 L/Alloy 625)	1.4404/1.4563 (316 L/Alloy 625)	1.4563 (Alloy 625)	1.4404 (316 L)	1.4404 (316 L)
Sample flow rate (kg/h)	60	60	250	60	60
Cooling capacity (kW)	60	20	115	3	3
PN cooling water (bar)	16	16	16	10	Pressureless
Test pressure of cooling water (1) (bar)	24	24	24	15	–
Volume of cooling coil (L)	0.47	0.27	0.55	0.04	0.04
Volume of shell side (L)	2.4	1.7	11.8	1.9	–

(1) Test pressure according to DIN EN/Test pressure according to ASME lower
(2) Standard materials/Special materials are available
(3) Per cooling coil

High-pressure valves

Apart from the sample coolers, high-pressure valves are the heart of the sampling systems. Dr. Thiedig high-pressure valves are highly precise and especially robust needle valves. The valves are ideally suited for the power plant operation, even under extreme, supercritical operating conditions.

Special constructional features ensure easy operation also in case of particularly high system pressures and prevent premature wear.

Dr. Thiedig´s range of products for the different sampling and measuring tasks includes shut-off valves, blow-off valves, pressure-reducing valves and fine-regulating valves.
All valves have detailed material certificates and have undergone functional testing in accordance with DIN EN 10204.

VD 65 HT

Features of the Dr. Thiedig high-pressure valves

- *Forged valve body made of high-temperature resistant stainless steel*
- *Differential thread and non-turning valve spindle*
- *Simple sealing owing to stuffing box gland*
- *Cooling top for temperatures > 450 °C*
- *Constructional design of the valves adjusted to the desired function*
- *Parts in contact with medium made of stainless steel*

Type	VD 30	VD 50	VD 65	VD 65 HT	VE 50	VC 50
Operating pressure (bar)	268	268	200	260	320	400
Operating temperature (°C)	400	400	600	630	200	150
Test pressure (1) (bar)	600	600	600	900	600	600
Nominal width (mm)	3	6	6	5	2 (3)	4
Parts in contact with the medium	1.4571	1.4571/1.4401 (SS 316)	1.4988 (Super Alloy)	1.4988 (Super Alloy)	1.4571/1.4404 (316 L)	1.4404
Differential thread	no	yes	yes	yes	yes	yes
Connection (2)	VS 3/8″	VS 3/8″ or SZ 10 mm	SZ 3/8″ SZ 10 mm	SZ 3/8″ or SZ 10 mm	R ½″	¼″ NPT

(1) Test pressure according to DIN EN/Test pressure according to ASME lower
(2) Standard connection/Alternative connections possible

Shut-off valve

Dr. Thiedig´s shut-off valves are used to shut off the sample material before the sample cooler. The valves have a straight bore in the valve body and must be in an either fully open or fully closed position. A throttling of the sample is not allowed and would cause damage to the valves. Apart from the differential thread for an easy handling also in case of high system pressures, the shut-off valves are furnished with a cooling top for the thermic protection of the gland packing at operating temperatures > 400 °C. Furthermore, shut-off valves serve as root valve for shutting-off the sample extraction.

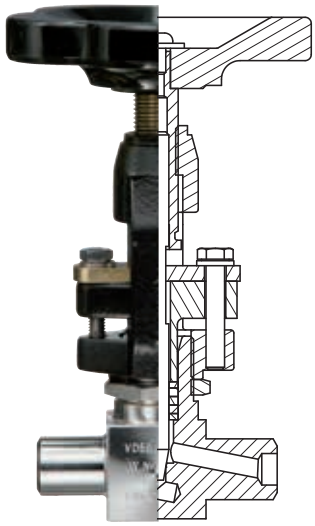

VD 50

VD 65

Blow-off valve

The blow-off valve serves to blow out the sampling line during commissioning and after longer standstill phases. The design of the blow-off valve is essentially the same as the shut-off valve, however, owing to its special spindle geometry, it is particularly suitable for blowing out. For higher operating pressures, it is recommended to use a double shut-off with the combination of shut-off valve and blow-off valve. The blow-out line is to be tightly piped.

Pressure-reducing valve

The pressure-reducing valve is designed as fine-regulating valve with angle passage. In order to avoid faulty measured values and phase changes from liquid to gas, the pressure reduction is to be carried out after the sample cooling. It should be noted that the desired sample flow is set by using the pressure-reducing valve. The pressure reduction only takes place in case the medium relieves pressure into the atmospheric environment. Therefore, the pressure-reducing valve and upstream components are to be designed in any case for the full system pressure. In addition to the differential thread, the pressure-reducing valve has a replaceable valve seat.

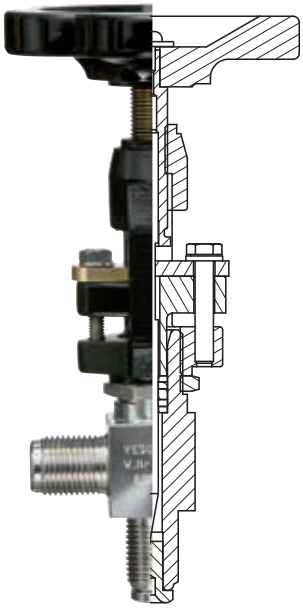

VE 50

High-pressure valves

Linear-reducing valve

The linear-reducing valve **VC 50** is designed as a capillary valve. The capillary length and thus the flow rate can be set very precisely by means of an adjustable slide unit. This design is particularly suitable for reducing high system pressures, ensuring minimal wear due to the laminar flow conditions inside the capillary. A further advantage is the long-term stable flow with typical soiling in the water-steam circuit compared with a needle valve. The capillary inside the valve can be opened completely in a rinsing position to remove deposits, and the valve can also be closed completely.

VC 50

Sample distribution units/Manifolds

The shut-off valve units and manifolds serve for the distribution of the cooled and pressure-reduced sample for laboratory sampling and supply of the analysers. Depending on the individual application, shut-off valve units which are designed for the system pressure or manifolds with an integrated back pressure indicator are available.

Sample distribution unit VB 1x

The distribution unit serves to split up the needed sample flow rate to the respective analysers. For this purpose, the distribution unit has its own regulating valve for every sample flow to adjust the optimal flow rate. An additional, separate outlet is foreseen to take a grab sample.

To ensure constant sample flow rates to the different analysers, a back pressure regulator with spring-loaded membrane is included. Dependent on the optimal upstream pressure, the regulator can be adjusted between 0.2 and 2 bar by means of a pressure gauge and protects downstream analysing units against pressure peaks.

Technical features

- *Clear valve arrangement*
- *Variable number of valve outlets*
- *Using fine adjustment valves*
- *Constant sample flows*
- *Integrated back pressure indicator with pressure gauge*

Type	Design pressure (bar)	Design temperature (°C)	Nominal width (mm)	Number of sample flows	Adjusted pressure BPR (bar)	Pressure indication (bar)
VB 12	10	100	3	2	0.2 -2.5	0 - 4
VB 13	10	100	3	3	0.2 - 2.5	0 - 4
VB 14	10	100	3	4	0.2 - 2.5	0 - 4
VB 15	10	100	3	5	0.2 - 2.5	0 - 4
VB 22	320	200	3	2	-	-
VB 23	320	200	3	3	-	-
VB 24	320	200	3	4	-	-

Temperature protection systems

Depending on the application and the model, different temperature protection systems are available. The use of these systems is recommended in all current guidelines and standards for the protection of personnel and measuring instruments. All temperature protection systems are equipped with a reset button for safety reasons and must be designed for the full system pressure.

Mechanical temperature protection Autosafe

The Autosafe is a fully mechanical system which does not need any auxiliary power. The temperature protection is triggered by a thermocouple which facilitates the triggering in the range of 50 – 60 °C (set temperature is adjusted at the factory). As an option, the triggering may be monitored by means of a potential-free contact.

Design pressure: 310 bar at 60 °C

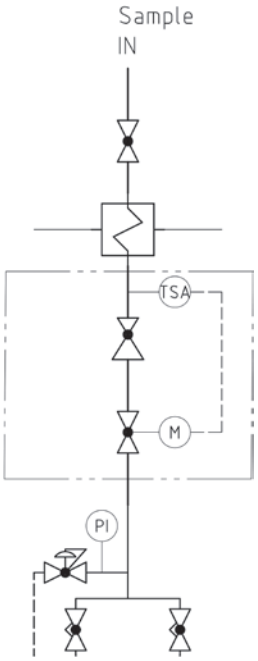

Electrical temperature protection

In case of the electrical temperature protection, an externally controlled valve is actuated by the temperature switching device TEMP CONTROL. In this system, the response temperature is freely adjustable. Depending on the system pressure, a solenoid valve (design < 40 bar) or motor valve (design up to 250 bar) is used as closing valve. Whereas a solenoid valve is closed in the absence of current, the supply with an uninterruptible power supply (UPS) is advised in case of a motor valve. Alternatively, the use of pneumatic valves is possible.

System accessories Sample

Filter systems

For the protection of the extraction system and the analysers, filters in the sample flow can be provided in case of a strong particle load. Different filter versions are available depending on the amount of particles and the respective kind of material. When selecting a filter, it is important to check the system parameters in the design section and to ensure that a representative laboratory sample is taken before the filter element.

Mechanical particle filter PE 23

The mechanical filter can be equipped with mesh sizes between 1 µm and 120 µm. Owing to its pressure resistance up to 400 bar (at 120 °C) and the large filter volume, the filter PE 23 is ideally suited for the use before the pressure reduction which frequently has the smallest cross section in the extraction system. The filter can be opened without tools (only knurled screw).

Magnetic filter PE 25

The magnetic filter PE 25 serves to remove mainly ferritic particles (iron) and is equipped with a very strong magnetic rod (approx. 0.9 T). A specific flow distribution inside the filter ensures a uniform distribution on the magnetic rod. The cleaning of the magnetic rod is carried out mechanically. For this purpose, the magnetic rod can be easily removed. The filter is designed for 250 bar (at 120 °C) so that the magnetic filter can also be used before the pressure reduction. The filter is especially suitable for the removal of iron and ferritic corrosion products brought about by cracking the protective layer due frequent start-ups and shut-downs.

Cation exchanger

The cation exchanger is designed for the measurement of acid conductivity – the most frequent measurement in the water-steam cycle of a steam generator. In the cation exchanger, the influence of alkalising materials (e.g. NH3) on the conductivity measurement is neutralised and the response sensitivity of the conductivity measurement is increased through the conversion of salts into the corresponding acids – through the replacement of the metal ion by a hydrogen ion. The cation exchangers are easy to handle and protected against impermissible overpressure. By using transparent vessels and exchanger resin with colour indicator, the state of exhaustion of the exchanger can easily be identified. The volume of the cation exchanger is 1.5 liters (alternatively 3 liters).

Cation exchanger PE 15/16

The cation exchanger PE 15 features easy handling due to the use of hose couplings at the inlet and outlet. The ventilation of the cation exchanger is carried out via the pressure relief valve during the filling process. The regeneration of the exchanger resin can be carried out directly in the cation exchanger when using the corresponding regeneration stations.

CatControl PE 14

Compared with PE 15, the CatControl PE 14 has several additional functions making it ideally suited for the use in (partly) automated systems. The conductivity electrode(s) is(are) integrated in the head of the CatControl and – if Thiedig conductivity measuring instruments are used – facilitate the determination of the pH-value and the grade of exhaustion if the following requirements are fulfilled:

- *Use of just one alkalising medium*
- *Main contamination by NaCl*
- *pH-value > 8*
- *Low phosphate concentration (< 0.5 mg/l)*

Furthermore, the CatControl has a flow display and monitoring and is equipped with automatic ventilation. The CatControl is available in panel construction together with the conductivity measurement Con 6 m delta.

System accessories Sample

Regeneration systems

The exchanger resins of the cation exchangers can be chemically regenerated so that the absorption capacity of the resin is restored. The regeneration is usually carried out with hydrochloric acid and is subsequently flushed with demineralised water. For this purpose, there are simple, manual regeneration stations up to automated systems for several exchange resins. In any case, the regeneration of the resins is both environmentally and economically beneficial. Due to the use of specific adapters, the regeneration systems are also suitable for the regeneration of other brands.

Regeneration station RS1

The automatic regeneration station consists of a rack with a collection tank for the acid or demineralised water and a regeneration head to accommodate the cation exchanger to be regenerated. Acid-resistant quick couplings facilitate easy handling. The station is started by the push of a button initiating the regeneration programme. As an option, it is stopped automatically by a conductivity measurement.

Automatic regeneration system RS4

With the automatic regeneration system, four cation exchangers can be automatically regenerated at the same time. The processes “loosening, regeneration and rinsing” are carried out automatically. In addition, the device is also able to process different states of exhaustion in parallel operation. Acid dosing is carried out with high accuracy by means of an injector pump. A rinsing result control with a conductivity measurement is available as an option. According to WHG, the regeneration system RS4 is equipped with an acid-resistant collection tray which, in case of acid losses, also triggers an automatic alarm with a level sensor.

System accessories Sample

Back pressure regulator VR 50

The back pressure regulator is based on a spring-loaded membrane and ensures a constant sample flow at load changes. The regulator is placed after the pressure reduction parallel to the fine adjustment valves to the individual analysing flows. Due to controlled discharge of the relief flow, the regulator ensures a constant sample feeding to the analysers under different operating conditions. The back pressure regulator can be adjusted between 0.2 and 2 bar. The regulator can be used either as an individual component or a component which is integrated in the distribution unit.

Pressure reducer PE 27

In case of strongly fluctuating system pressures, the use of a pressure reducer is in fact to be recommended. The pressure reducer keeps the outlet pressure constant – even if the system pressure fluctuates. Unlike the back pressure regulator VR 50, the pressure reducer, however, does not regulate pressure fluctuations in the low-pressure part. For the protection of the pressure reducer, it is recommended to use an upstream particle filter and a downstream safety valve.

Relief valve PE 30

For the protection of the extraction system, the secondary pressure can be monitored with an adjustable relief valve. It is installed after the pressure reduction in order to prevent an impermissible pressure rise.

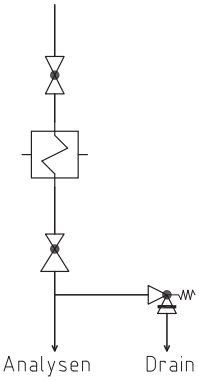

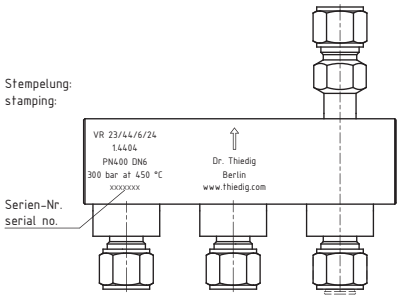

Check valve VR 11/VR 2x

In case of several parallel inlet valves at the sample inlet, the use of check valves is recommended. They prevent short-circuit flows with an impermissible pressure rise in the event of operation errors or leaks. The check valves are available separately or as block and are designed for the full system parameters.

System accessories Sample

Flowmeter PE 47

The flowmeter serves for the adjustment of the sample flow. It can be used to adjust both the total flow as well as single flows to the measuring instruments. Flowmeters are available with and without integrated needle valve and may also serve for the sample distribution if they have an integrated needle valve. As an additional option, the minimum flow rate can be monitored by using ring initiators as alarm contact.

Sampling probe PE 61 and dosing probe PE 62

The sampling probe is used to obtain a representative sample from the water-steam cycle and is at the same time – as the primary isolation – a pressure-retaining component at the boiler. The construction of the sampling probe consists of the welding stub (equivalent to the boiler material) with sampling tube and system isolation (single or double isolation). The specific design of the sampling probes with the flange connection enables the exchange of the sampling tube and simplifies the material transition between welding stub and austenitic system isolation. The sampling probe features double isolation for design pressures >PN63. Shut-off valves are dimensioned according to pressure and temperature.

Alternatively, other versions are also available. The shut-off valves are to be designed for the full system parameters. At pressures > 40 bar, the sampling probe is to be furnished with a double shut-off. The use of an additional check valve makes it possible that the sampling probe can also be operated as a dosing probe in opposite flow direction.

Technical features

- *Different stub materials are possible*
- *Stub length and length of the sampling tube are freely selectable*
- *Flange connection in order to avoid a mixed material weld*
- *Parts in contact with medium are made of austenitic materials*
- *Shut-off valves with differential thread and cooling top (> 400 °C)*
- *Also available as dosing probes with check valve*

System accessories Cooling water

Cooling water control device PE 72

The cooling water control device PE 72 serves for the optimum regulation of the cooling water consumption, depending on a constant sample temperature. Fluctuations of the cooling water temperature are compensated by the cooling water control device. A further application is keeping the sample temperature constant after the primary cooling at different measuring points. The cooling water regulating valve is installed in the cooling water inlet and controls the cooling water quantity, depending on the desired sample temperature (20 - 60 °C).

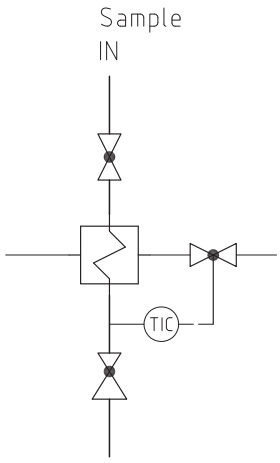

Flow chart Cooling water control system PE 72

Relief valve PE 50

The relief valve serves to protect the cooling water shell side of the sample cooler. In case of cooling water failure or faulty operation, the relief valve prevents the impermissible pressure rise of the cooling water caused by its warming. Maximum opening pressure of the relief valves is the design pressure of the cooling water shell side in the sample cooler.

Safety valve for the cooling water system

The safety valve in the cooling water system is only used in combination with check valves (or free outlet) at the cooling water outlet of the sample coolers. It protects the entire cooling water system against impermissible pressure rise by the warming of the cooling water or due to pressure peaks. The safety valve is set to the desired response pressure by the manufacturer and lead sealed.

Flow indicator PE 41

The flow indicator serves for the visual inspection of the cooling water flow and is usually mounted at the cooling water outlet of the sample cooler. As an option, the flow indicator is available with scaling.

Flow monitor

The flow monitor serves to check the cooling water flow without visual inspection. The flow monitor is mounted in the cooling water outlet and triggers an alarm contact if the flow drops below a set limit.

Sampling and analysing systems

Rack engineering

Intelligent solutions - ready for connection

Sampling racks enable a central arrangement of the individual sampling systems. They will be fully prepared and ready-to-connect for the operation and contain – in addition to the sampling units – the central cooling water supply, drain trough and internal cabling of the electrical terminal box.

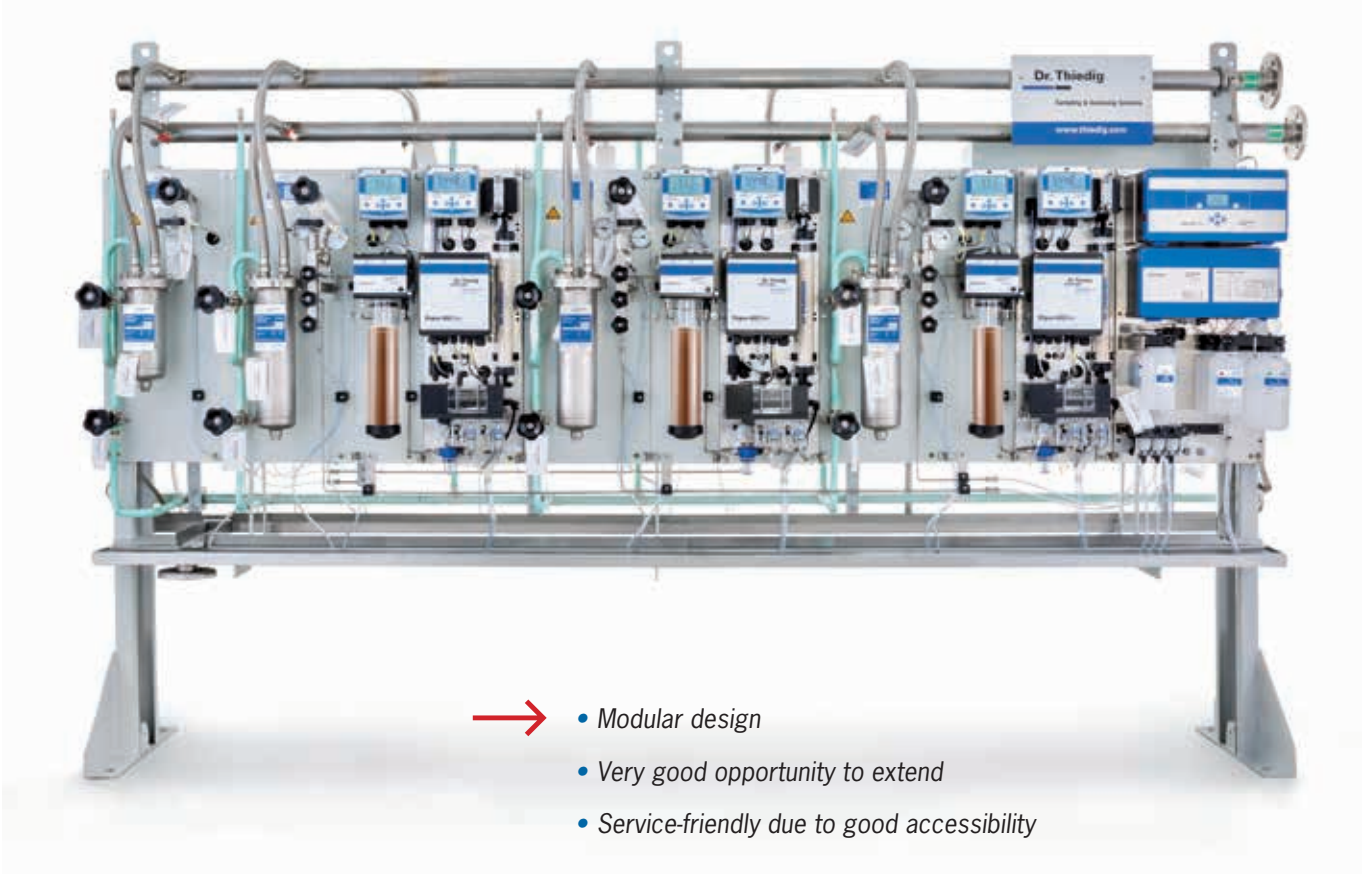

- *Modular design*
- *Very good opportunity to extend*
- *Service-friendly due to good accessibility*

The sampling racks are available for single or double-sided operation. Upon request, the design of the sampling unit can be separated into a wet and dry part.

Electrical control cabinet

The electrical connection is made via a terminal box. It requires a central source of power; the sub-distribution takes place in the terminal box. It also includes the signal transfer of the measurement values and the signals as well as possibly necessary control functions and interfaces.

Cabinet design

For the outdoor or decentralised installation, it is possible to integrate the sampling system inside the cabinet. The design of the cabinets can be made both in GRP and in stainless steel. Depending on the requirements, the cabinet can also be air-conditioned. The cabinet design is also available for Ex-zones.

Sampling containers

Intelligent solutions – ready for connection

Sampling and analysing containers represent a special kind of construction of sampling systems. They are prepared ready for connection and contain an entire sampling system with cooling water supply, cooling of samples, pressure reduction and all necessary analysers. The power supply and the interfaces are provided by a central control panel. The containers are equipped with air conditioning in order to protect the measuring instruments against the climatic conditions at the installation site. Upon request, analysing containers can also be supplied with closed cooling systems to enable the cooling of samples without external water supply.

Sampling container with separately positioned high-pressure components (conditioning part)

Condenser monitoring system

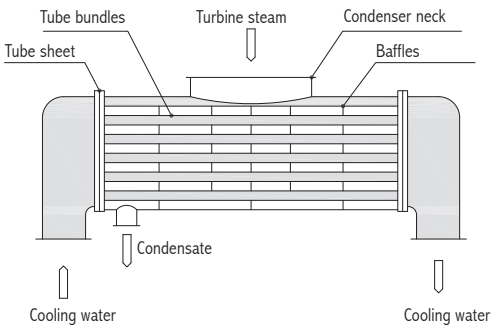

Condenser monitoring system

Monitoring of the steam condensate usually takes place on the pressure side of the condenser pump as the steam is cooled in the condenser under vacuum for reasons concerning the degree of efficiency. Thus, the sampling can only be carried out with a vacuum extraction pump. Apart from this, the monitoring with inline measurements is possible.

Online sampling with vacuum extraction pump

By means of a vacuum extraction pump, which is positioned directly below the condenser, a sample is taken from the condenser and fed into the sampling unit with overpressure for analytical measurements. The advantage of this arrangement is the measurement of the meaningful acid conductivity (with cation exchanger) and a possibility of a laboratory sampling. Standard measurements at the condenser measuring point are acid conductivity and sodium, both of which quickly detect cooling water ingress due to leakage in the condenser. Also an oxygen measurement is appropriate in order to detect air ingress in the condenser. For monitoring several chambers, a mixing section or the use of several inlet valves is possible.

Vacuum extraction pump with mixing section for monitoring several chambers of a condensate

Inline monitoring

As a rule, the inline monitoring of the condenser is merely used to detect the location of the cooling water leakage in the condenser. For this purpose, a specific conductivity measurement is installed into each chamber of the condensers with the sensor being inserted by means of a specific retractable fitting. The measurement with the highest conductivity shows the chamber affected by the leakage.

Sequencers & data transmission

Sample sequencer

The sample sequencer allows switching different sample flows at freely selectable time intervals to a downstream measuring device. The sequencer is based on a microprocessor-supported control which activates the 3/2-way solenoid valves. By using the 3/2-way solenoid valves, it is ensured that always a fresh sample is available at the measuring instrument. By freezing the 4-20 mA signals that are currently not used, all measured values are constantly available and the signals are assigned by the valve control. The sample sequencer can be operated both in continuous mode as well as in batch mode.

Advantages

- *Higher efficiency*
- *Switching between several sample flows*
- *Reagent saving*
- *Simplified monitoring of diagnostic parameters*
- *Free programming of the switching frequencies*

Signal exchange

The signal exchange of analogue signals per 4...20 mA (hard-wired) is widely used in power plants. These signals have been captured either directly at the transmitter or put onto a terminal block in the control cabinet. The same applies to any possible alarms or status messages. Additionally, there is the possibility of transmitting the signals and status messages by means of a fieldbus (e.g. Profibus DP). This can be done autonomously or parallel to the transmission of the analogue signal. The transmission via fieldbus has the advantage that – in addition to the measured value – also other status information may be transmitted if these are provided at the measuring instrument. For measuring instruments without fieldbus interface, the analogue signals can be digitally converted. Bus systems are wired in a row thus minimizing cabling effort.

The figure below illustrates the signal exchange via “Redundant Serial Data Link with Modbus”. For this purpose, both Profibus-capable measuring instruments as well as digitally converted signals have been included here in the bus. For secure data transmission, a redundancy module provides two redundant interfaces of the DCS.

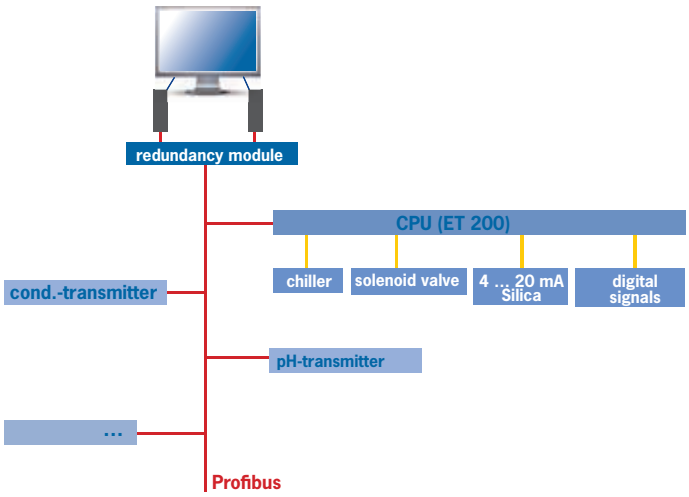

SWAS 4.0

In the course of digitalisation, we offer various solutions of data transfer.

In addition to sampling components, Dr. Thiedig's product range also includes the complete assortment of the necessary analysers for monitoring water-steam cycles. These devices are specifically tailored to address the needs in power plants and meet the requirements of international provisions and guidelines. Thus, it is possible to offer the sampling and analysing system with our own know-how completely from one source.

Upon request, we can, of course, use other measuring instruments of well-known manufacturers.

Measuring loop Con 6 *m*

A compact measurement technology for analyses for pH, redox, conductive and inductive conductivity. The "*m*" stands for multi-parameter. The Con 6 *m* is available in a 2-wire version and a 4-wire version and makes the use of analogue and digital sensors (Memosens) possible.

The digital platform of the Con 6 *m* enables an interference-resistant processing of the measured signals which are being digitised within the sensor. When using analogue sensors, the device fully automatically identifies the parameter as early as during the insertion of the required measuring modules.

- *Intuitive operation with colour-supported user guidance*
- *For digital Memosens and analogue sensors*
- *Diagnostic functions for Memosens sensors*
- *Effective wide-range power supply*
- *Feeding of external 2-wire measuring transmitters*
- *Ex-protection zone 2 (option)*
- *Digital communication*
  - *PROFIBUS-DP*
  - *HART*

Red blinking: Alarm, error | Orange: HOLD mode | Green: Information texts | White: Measuring mode | Magenta: Maintenance request | Turquoise: Diagnostics

Differential conductivity: CatCon 6 *delta*

Measuring instrument for the determination of

- Direct conductivity
- Acid conductivity
- Differential conductivity (pH-value calculation)

- Calculation of the pH-value in the range of 7.5 to 10.5 pH (VGB-S-006)
- Calculation of the concentration of the alkalising medium, such as ammonia from 0.01 to 10 ppm.

Preconditions for the pH-value calculation

- *Use of just one alkalising medium*
- *Main contamination by NaCl*
- *Phosphate < 0.5 mg/l*
- *pH-value > 7.5*
- *If the pH-value is < 7.5, the concentration of the contamination must be low in comparison to the alkalising medium.*

pH-value: Con 6 *m* pH

Measuring instrument for the determination of the

- pH-value

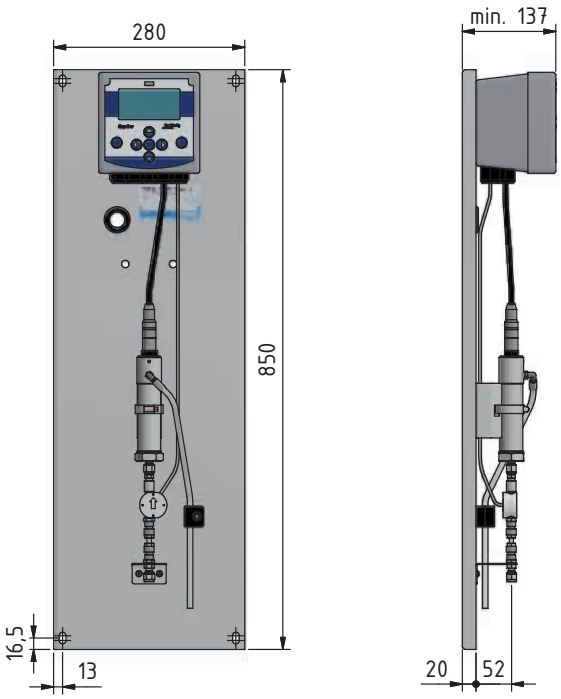

Measuring range	Conductivity 0 – 1000 µS/cm, pH-value calculation from 7.5 to 10.5 pH
Measuring range pH-value	0 – 14 pH

Degassed acid conductivity: Digox 602 *dac*

Design with relief bypass and counter flow principle

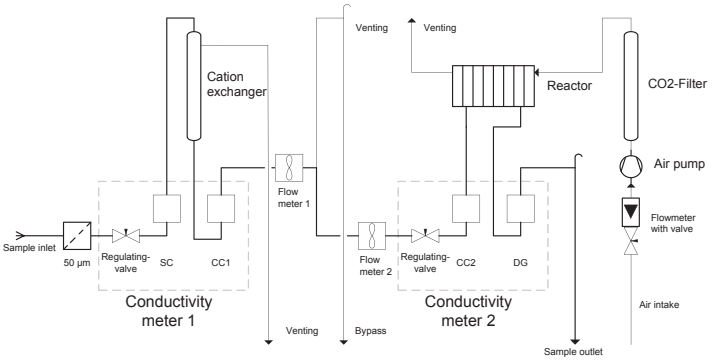

The DAC measurement has become an important basic parameter in today's water-steam cycle. Especially in combined cycle power plants with peak load operation, the DAC measurement is recommended as standard in feed water and live steam.

Owing to the DAC measurement, which shows the conductivity value without CO_2 influence, the start-up time of the power plant is greatly reduced. For the power plant operator, this is not only an ecological benefit but and economical one as well.

The DAC facilitates the measurement of

1. Specific or direct conductivity
2. Acid conductivity or cation conductivity after strongly acid cation exchanger
3. Degassed acid conductivity

Furthermore, the pH-value and the concentration of the alkalising mediums can be calculated by means of the conductivity difference. Apart from the significant reduction, the CO_2 influence in the system may be generally monitored. The following detections can be made:

- *Air and cooling water leakages*
- *Organic decomposition in the water-steam cycle*
- *Quality of feed water*
- *Efficiency of the degassing in the entire system*

Special features of the DAC

- *Revolutionary method for the extraction of CO_2 – no heating of the sample, instead removal by means of stripping with CO_2 free air. Successful track record in the market of more than 10 years with many references!*
- *High gain of degassed CO_2 of > 90 %*
- *Very short response time and maximum measurement accuracy*
- *Based on ASTM D 4519-16 and VGB-S-006*

We also offer the DAC as a potential retrofit option, the DAC basic. Here, a pure "degassing unit" will be retrofitted into the existing system, simply downstream the acid or cation conductivity. Due to the ready-to-connect and compact design as well as the low power consumption, such a refitting is possible with only little expense and effort.

Measuring range	Conductivity 0 – 1000 µS/cm, pH-value calculation of 7.5 – 10.5 pH

Sodium: Digox 602 *sodium*

The determination of sodium in low concentrations in the water-steam cycle is of huge importance in power plants. On the one hand, this is due to the fact that the significance of sodium in corrosion processes has become more and more recognized over the last few years. On the other hand, this measurement procedure enables a fast monitoring of a leakage for instance in the condenser or the aperture in a cation exchanger or a mixed bed exchanger. Not least for that reason, the sodium measurement has become increasingly important when revising the VGB guidelines (S-006 / S-010).

The Digox 602 *sodium* is an analyser for the continuous measurement of dissolved sodium, even at the level of trace elements, and ideally suited for the operation in the water-steam cycle of power plants, for the control of full demineralisation units, desalination of sea water as well as in the semiconductor industry and electronics industry.

In order to enable a measurement without the influence of hydronium ions, the sample is conditioned to a value of pH 11 +/- 0.02. The measurement is potentiometrically carried out by means of a special measuring sequence with an Na-sensitive electrode in combination with an Ag/AgCl reference electrode:

Ag/AgCl(S) – buffer – Na+-sensitive glass membrane - alkalised measuring solution - diaphragm – KCl electrolyte gel - AgCl(S)/Ag.

- *Key parameter in VGB-S-010*
- *Potentiometric measurement with an Na-selective electrode*
- *Automatic three-point calibration*
- *Automatic regeneration of sodium electrode*
- *Sequencer for up to 6 sample channels*
- *Very low consumption of conditioning materials by means of a PID controller*
- *Maintenance-free, high-precision micro-dosing pump for stock solution*

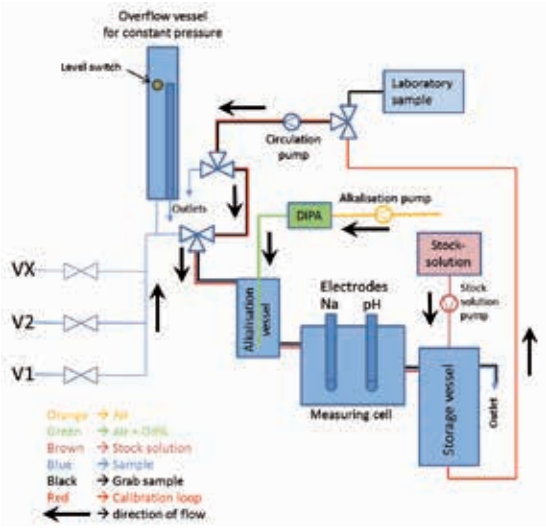

Flow chart to the sodium analyser Digox 602 *sodium*

Measuring range	0.1 – 2000 ppb Na

Silicic acid: Digox 602 *silica*

The determination of dissolved silicic acid (ortho-silicate) in the water-steam cycle is of great importance for the operation and plant safety in power plants. In addition to the determination of ortho-silicate in the live steam in order to avoid deposits or crystallisation inside the turbine, it is possible to detect an aperture in the anions and mixed bed exchanger.

The Digox 602 *silica* has been further developed and is in accordance with the physical-chemical measuring method of the new VGB guidelines S-006 for the quantitative detection of dissolved silicic acid. A photometric procedure with a detection limit of 0.5 ppb is used which is ideally suited for the determination of silicic acid in ultra-pure water. For determining the measured values, the Lambert-Beer's law applies in combination with an additional calibration and calculation for the non-linear range in higher concentrations.

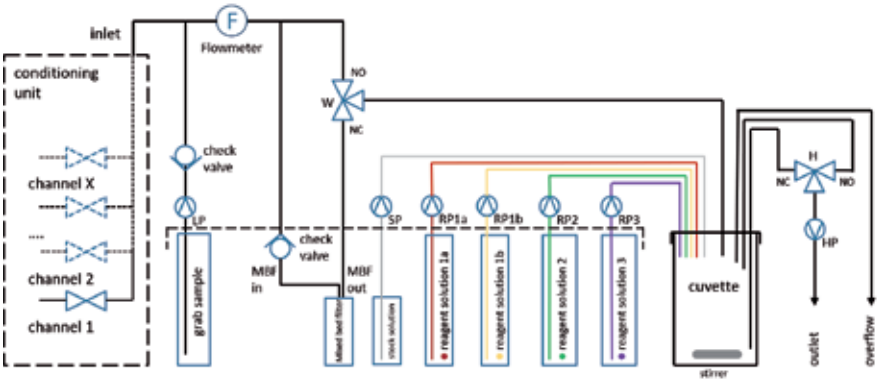

Flow chart to the analyser of silicic acid Digox 602 *silica*

- *Control of the ortho-silicate in the live steam and monitoring of the ion exchanger*
- *Photometric procedure with a detection limit of 0.5 ppb*
- *Automatic calibration*
- *Sequencer for up to 6 sample channels*
- *Maintenance-free, high-precision micro-dosing pumps for chemicals and stock solution*

Measuring range	0 – 5000 ppb SiO_2

Oxygen: Digox 6.1 K

Reliable and rugged design

The measuring principle of the Digox 6.1 is based on the cathodic reduction of dissolved oxygen on a polarised electrode. The Thiedig sensor works by means of a potentiostatically controlled arrangement of three electrodes. Unlike other measuring methods, the medium to be analysed acts as an electrolyte and is not separated from the sensor by a membrane.

Each electro-chemical or optical sensor needs to be calibrated outside the sample medium, which is inconvenient and takes time. The Thiedig sensor can be calibrated "in-situ" during a measurement. The calibration is carried out under the actual measuring conditions; the calibration point is within the measuring range.

Application of the Digox 6.1 KS/K-LC (stationary/portable)

- Monitoring the oxygen concentration in boiler feed water, condensate and process water
- Detecting oxygen leaks in process steam or heating networks
- As an controlled variable for oxygen dosing systems
- Detecting oxygen leaks
- Periodic oxygen measurement at sites which are not equipped with stationary measuring instruments
- Checking stationary analysers

- *The sensor works in a drift-free and reliable manner*
- *The response time is extremely short due to the direct contact with medium*
- *No consumable materials*
- *The system allows for an exact compensation of both temperature and flow over a wide range*
- *There is no zero-point drift as a result of the measuring principle*
- *Due to the built-in calibration cell, the measuring sensitivity can be checked at any time without interrupting the measurement*

Measuring range	0 – 1000 ppb O_2

Hydrazine: Digox 6.1 HY-S

With the Digox 6.1, the hydrazine concentration dissolved in the medium is determined by means of an amperometric measuring procedure. During this process, the hydrazine is oxidised at a gold electrode which is directly immersed in the medium. This ensures short response times and a maximum of precision.

One feature of the Digox 6.1 is the robust sensor which requires only low maintenance. Due to the modular construction of the instrument, the sensor is easily accessible if it needs to be cleaned or serviced.

The hydrazine measuring instrument is used in power plants that additionally dose hydrazine in order to reduce the oxygen concentration. Conventional measuring points are especially in the degasser, condensate and boiler feed water.

- *Unique measuring technique with open electrode system without membrane. No consumable materials are produced and the operating costs and maintenance expenditure are correspondingly low.*
- *High accuracy, short response time, drift-free measuring principle*
- *Robust sensor, low maintenance and maintenance-friendly*

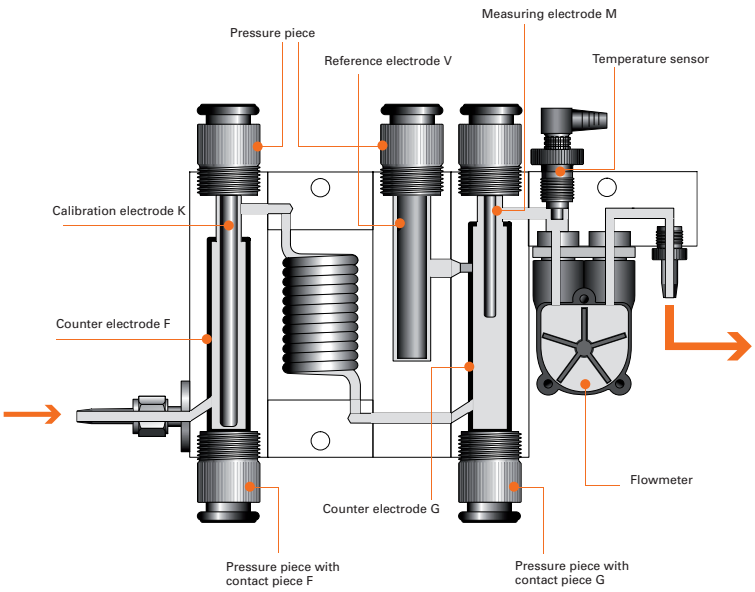

- *Hydrazine measurement in liquids*
- *In power plants and chemical industry*
- *Unique measuring technique with open electrode system without membrane*

Measuring range	0 – 1000 ppb N_2H_4

Quality assurance

Industrial safety and product quality for your products – What is important for you / us

A sampling system is a highly complex system with high-pressure components. At the end, sample flows exit in an unpressurised state at room temperature. What, however, happens before the valve distribution block, is highly energetic inside the components and is not dangerous only as long as it remains encapsulated there. Any form of release of steam is to be avoided.

Steam that is highly energetic and invisible can be a danger to life and limb.

It is therefore necessary to ensure a correct design, testing and regular maintenance.

Measures of Dr. Thiedig

- Compliance with the Pressure Equipment Directive (PED) and Machinery Directive (MD)
- Approval according to the AD 2000 HP0
- Documentation according to the Pressure Equipment Directive (PED)
- Purchase of materials with certificates according to DIN EN 10204-3.1 or higher

Additional compliance with international standards (if required):

We provide:	AD 2000, TRD, RCC-M, KTA 1401, DIN EN 13445, DIN EN 13480, ASME
QA in material:	Certificates for all pressure-retaining parts 3.1 or higher (DIN EN 10204)
QA in welding:	DIN EN ISO 3834 Part 2
	Welder's qualification according to DIN EN ISO 9606 Part 1 (EN 287)
	Operator's qualification according to DIN EN ISO 14732 (EN 1418)
QA in testing:	Personnel in the levels 1-3 according to DIN EN 9712
QA in engineering:	System conformity according to VGB-S-006 and VGB-S-010
	alternatively: ASME PTC 19.11-2008 / ASTM D 1066

Range of components

Media temperatures	up to 630 °C
Media pressures	up to 400 bar
Sample flows	up to 250 l/h
Media lines	up to from 4.0 x 1.0 up to 400 x 16 mm

Proper media insulation with high-quality material (Delta T 300 K)
plus mechanical touch protection.

Cooling water table

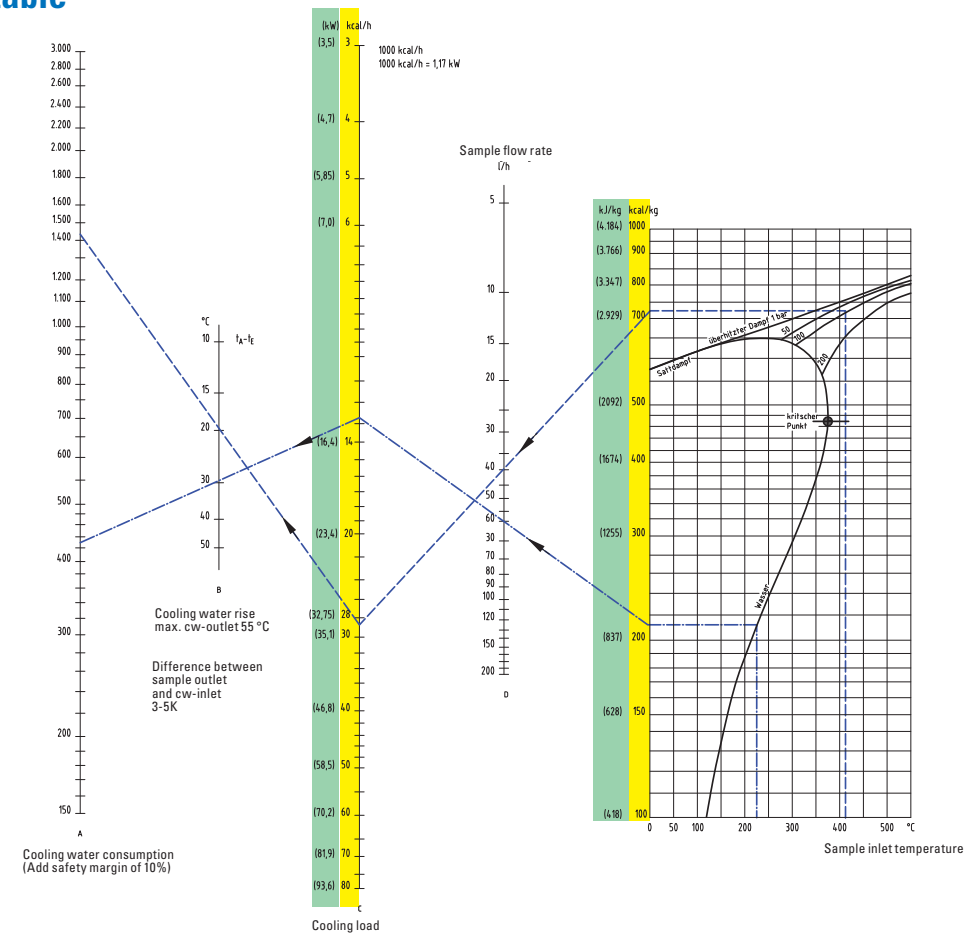

Pressure drop cooler (tube-side)

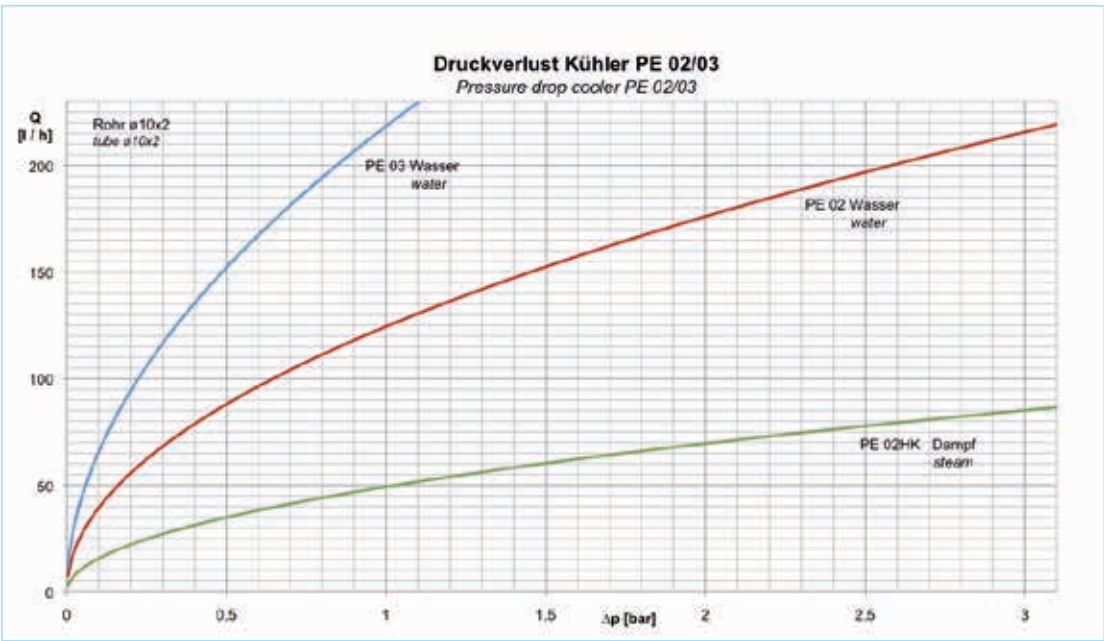

Technical information

Strength values of high-pressure valves

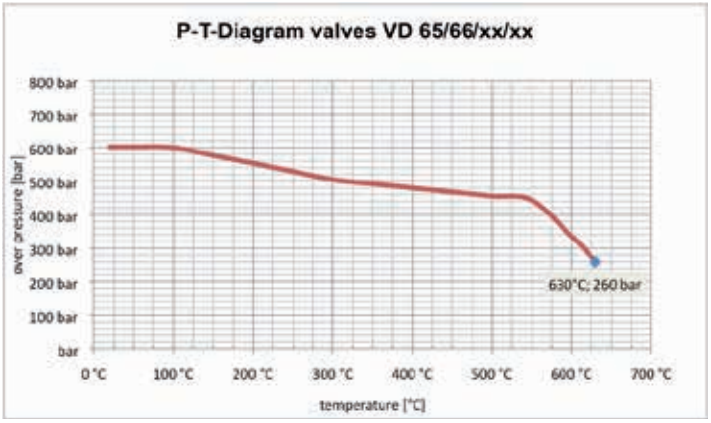

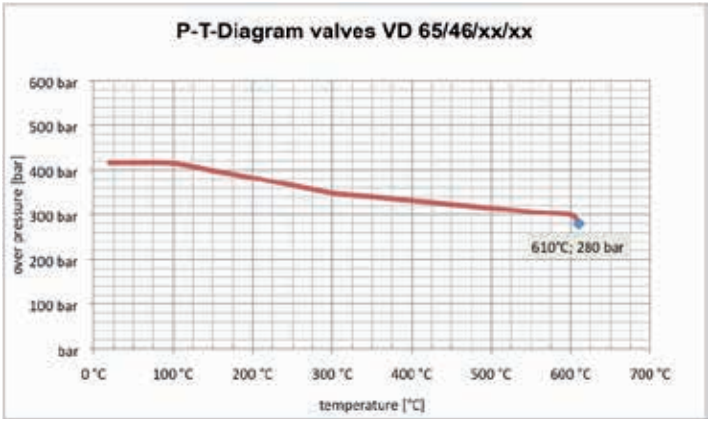

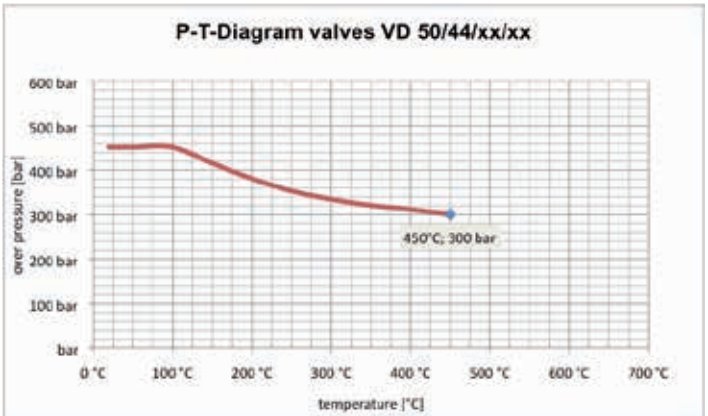

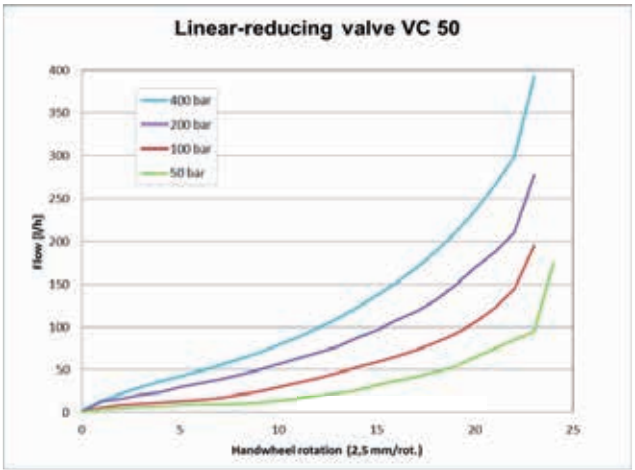

Strength values of the sample cooler

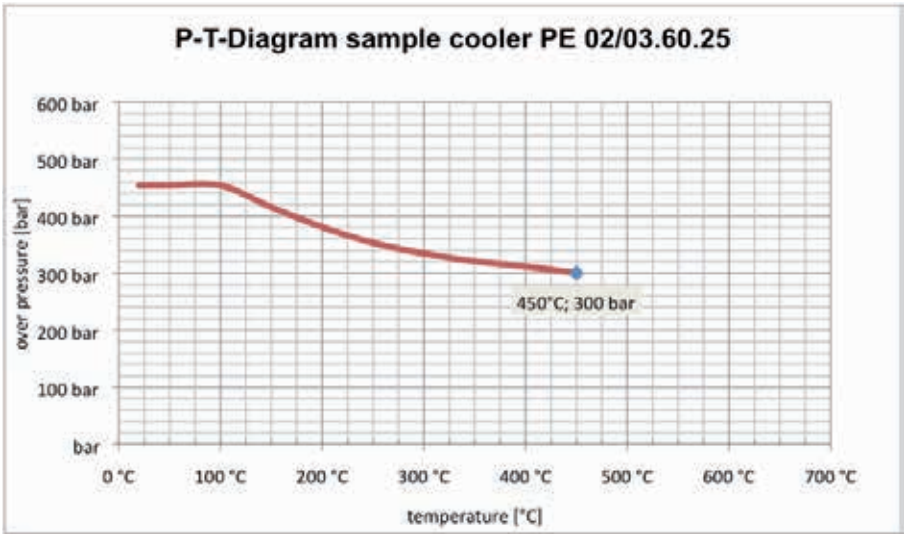

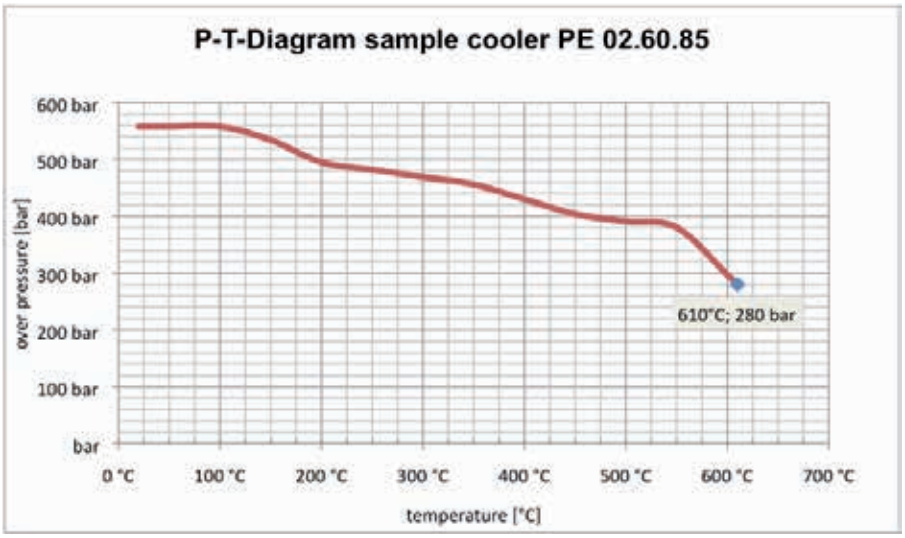

Valve design of flow capacity

The flow will be calculated as follows:

$$Q = 31{,}6 \times K_V \times \sqrt{(\Delta p / \rho)}$$

p: Density of flow medium [kg m³]
Δp: Pressure drop via valve [bar]
Q: Flow rate [m³ h⁻¹]
Kv: Flow capacity [m³ h⁻¹]

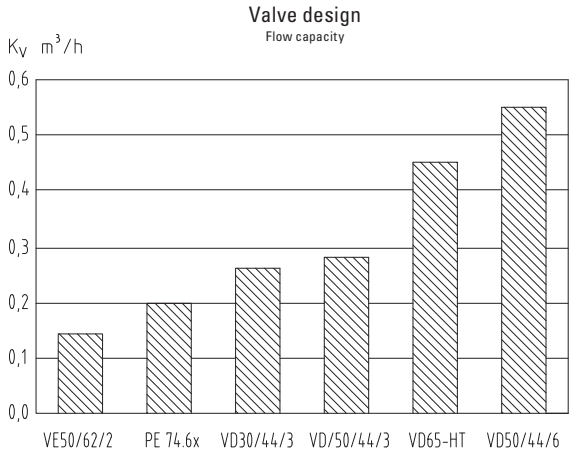

Remark: $c_v = 1{,}17 \times k_v$

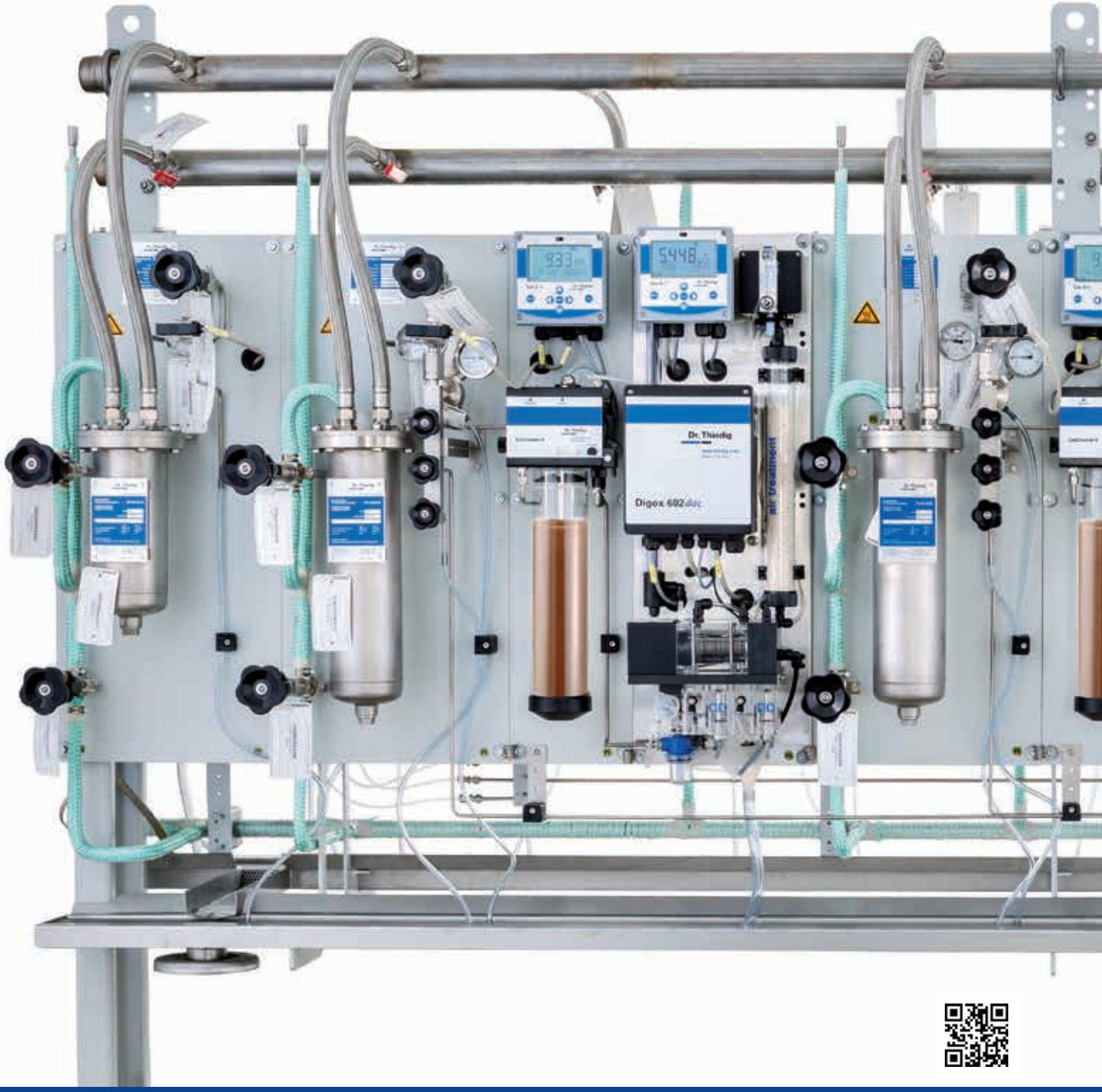

Dr. Thiedig

Sampling & Analysing Systems

Dr. Thiedig GmbH & Co KG
Prinzenallee 78-79
13357 Berlin I Germany

Phone +49(0)30/497769-0
Fax +49(0)30/497769-25

info@thiedig.com
www.thiedig.com